Instruction

Thanks for purchasing and using our focimeter.

Before using our instrument,please read this manual carefully.We sincerely hope that it will provide you with enough information.

Providing products with more refined quality, complete function and characteristics to customers is our target. We regret any inconvenience caused by not notifying you the differences of products from those advertised on promotional and packaging materials resulted by product performance enhancement. Meanwhile we reserve the right of constantly updating products and materials.

If there is any problem during use, please contact authorized distributor.

Your satisfaction is the cornerstone of our progress!

Index

1. Brief instruction ····· 1
2. Uses ····· 1
3. Features ····· 1
4. Using environment ····· 2
5. Main Technical Indexes ····· 2
6. Principle of Operation ····· 3
7. Configuration ····· 4
8. Operation Instruction ····· 11
8.1 Preparation before Measurement ····· 11
8.2 Points for Attention in Operation ····· 11
8.3 Placement of Lens ····· 12
8.4 Measurement of Spherical Lens ····· 12
8.5 Measurement of Sphero-Cylindrical Lens ····· 12
8.6 Calculation of Prism Lens ····· 15
8.7 Demarcation of Lens ····· 16
9. Maintenance of Instrument ····· 17
10. Troubleshooting ····· 18

1. Brief instruction

Being a major professional manufacturer and export enterprise producing optical and ophthalmic instruments, we focus on developing, manufacturing, sales and service of ophthalmic instruments mainly including focimeter, pupilometer, trial frame, vision tester, slit-lamp series, auto refractor and so on.

2. Uses

It is applicable to measurement testing departments, spectacles manufacturers, retail dealers of spectacles, hospital's department of ophthalmology and optical element factories for conducting measurement of spherical lens diopter, cylindrical lens diopter, cylindrical lens axis of astigmatism, prism diopter, prism basal angle and cornea contact lens diopter.

It is divided into 2 models, standard model and strengthened model with prism compensator.

3. Features

± 25 diopter measurement

Large arrange of observation

LED green light, low-power

Use medical power adapter, more secure

Support the use of external battery

4. Using environment

Install and use the instrument in following environment

Ambient temperature: 5 ℃ ~ 35 ℃

Humidity: less than 85% RH

Clean indoor

No direct exposure to bright light

5. Main Technical Indexes

5.1 Range of measurement： $-25m^{-1}$~ $+25m^{-1}$

Minimum scale value ： $-5m^{-1}$~ $+5m^{-1}$: $0.125m^{-1}$;

$-5m^{-1}$~ $-25m^{-1}$、$5m^{-1}$~ $+25m^{-1}$: $0.25m^{-1}$

5.2 Astigmatism axis angle of cylindric lens ：

0 ~ 180° Minimum scale value 1°

5.3 Prism diopter:

Standard model: 0 ~ 5cm/m Minimum scale value 1cm/m

*Strengthened model (with prism compensator): 0 ~ 20cm/m

Minimum scale value 1cm/m

5.4 Prism basal angle ： 0 ~ 180° Minimum scale value 1°

5.5 Regulation of ocular visibility: $-5m^{-1}$~ $+5m^{-1}$

5.6 Size of lens ： Φ16mm ~ Φ 80mm

5.7 Overall dimensions of device：

280mm (L) × 150mm (W) × 450mm (H)

5.8 Weight： Standard model: 4.9kg / Strengthened Model: 5kg

5.9 Lighting lamp： 6V / 2A 12W

6. Principle of Operation

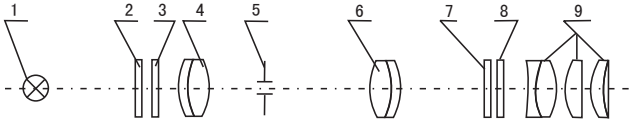

Fig.6 Diagram of Optical Principle

1. Light source 2.Color filter 3.Marker reticule 4.Measuring objective lens 5.Diaphragm 6.Objective lens 7.Angle reticule 8.Cross reticule 9.Eyepiece

This instrument consists of two coaxial optical systems. Light sent out from light source 1(ligting bulb) passes through color filter 2 to lighten marker reticule 3.Through measuring objective lens 4 and objective lens 6, marker reticule 3 forms its image on angle reticule 7.Meanwhile, reading division board 10 forms its image on angle reticule 7 through front lens 12 and back lens 14. At this time, human eyes are able to clearly observe the images of reticule 3 angle reticule 7 and reading division board 10.

During the operation, place measured lens at position of diaphragm 5(Objective lens bearing seat), turn and axially move marker reticule 3 so that it is imaged clearly. Then the scale interval shown on the reading division board 10 is just the numerical value of diopter.

7. Configuration

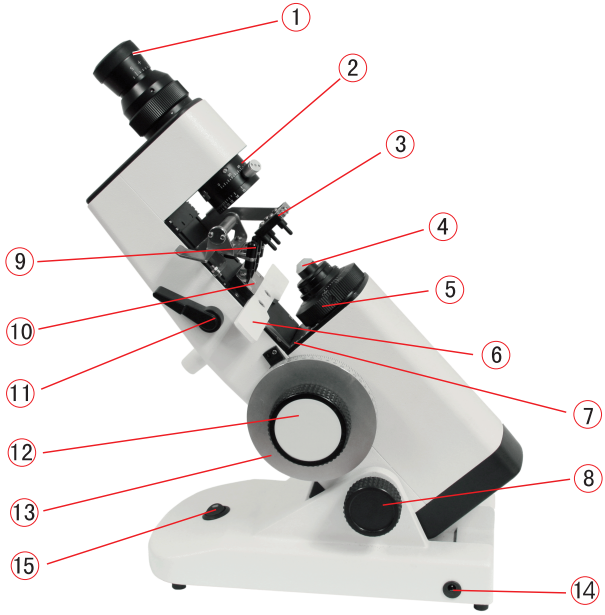

Fig.7 Configuration

①. Eyepiece
②. Prism compensation device
③. Lens pressing unit
④. Objective lens bearing seat
⑤. Astigmatism axis measuring hand wheel
⑥. Lens pushing board
⑦. Diameter ruler
⑧. Device indication lever
⑨. Marking unit
⑩. Ink Pad
⑪. Lens pushing unit
⑫. Diopter measuring hand wheel
⑬. Diopter Scale
⑭. Power connection jack
⑮. Power Switch

7.1 Eyepiece

Eyepiece section is equipped with a spiral focusing unit whose range of focusing is ± 5D so as to suit different eyesight of operators.

Fig 7.1 Eyepiece

7.2 Prism compensation device

It is used to compensate the measuring arrange of prism. After configuring this attachment, the prism measurement range is increased from 0cm/m ~ 5cm/m to 0cm/m ~ 20cm/mm ~ 20cm/m.

Fig 7.2 Prism compensation device

7.3 Lens pressing unit

When it is operated, lift the lens pressing bracket so that the lens pressing unit lowers to press the lens. After using it, raise the lens pressing unit and then the lens pressing unit is hung.

Fig 7.3 Lens pressing unit

7.4 Objective lens bearing seat

It is gray plastic part which is able to stably support lens.

Fig 7.4 Objective lens bearing seat

7.5 Astigmatism axis measuring hand wheel

It is used to measure and fix angle of astigmatism axis of cylindrical lens and base angle of prism lens. Its angle is consistent with that of eyepiece reticule 7, the scale range is 0 ~ 180° with interval of 5°.

Fig 7.5 Astigmatism axis measuring hand wheel

7.6 Lens pushing unit

The unit is used to fix the position of frame and lens. During operation, turn backwards the lens pushing handle and then the lens pushing board is pushed out forwardly. After use, turn forward the lens pushing handle to withdraw the lens pushing board. During measurement, first press the lens with the lens pressing unit and slightly move the lens so that it aims right at frame center, then fix it with the lens pushing unit.

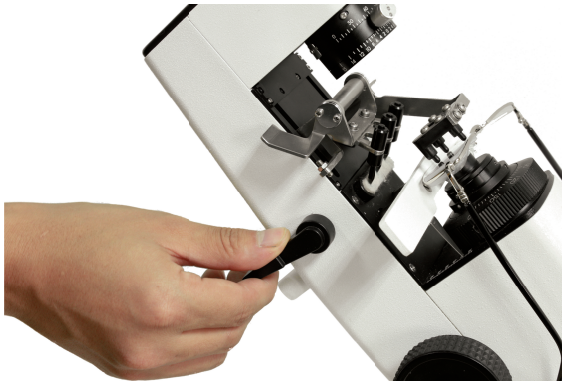

Fig7. 6 Lens pushing unit

7.7 Lens radius (diameter) indicate scale

During measuring, move lens pushing board contacting the edge of lens and aiming at the center, radius (diameter) can be read directly.

7.8 Instrument's inclination Lever

After screwing out the handle anticlockwise, the operator can incline the device freely, and then turn the handle clockwise to lock and fix the instrument.

Fig7. 8 Instrument's inclination Lever

7.9 Marking unit

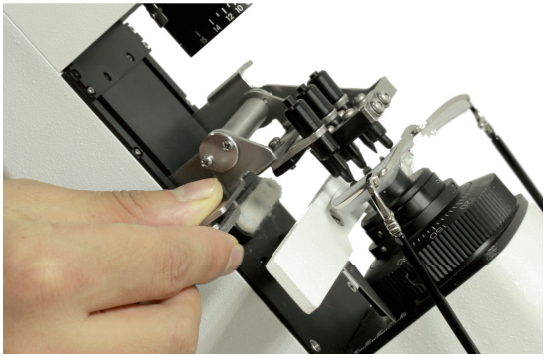

Fig7. 9 Marking unit

The unit has 3 identical point-making pens connected in line, the pen in the middle is used to set center of lens and the connected line of marking points made by these 3 pens are used to demarcate angle of astigmatism axis and base angle of prism lens. When marking is needed, turn and push marking lever, then mark ink points on the lens swiftly。

7.10 Ink pad

It’s used to store printing ink or ink.

7.11 Lens pushing hand wheel

It’s used to adjust the lens pressing unit up and down.

7.12 Diopter measuring handwheel

During the measurement, turn this knob to adjust focus and diopter.

Fig7. 12 Diopter measuring handwheel

7.13 Power switch

To control on or off power.

7.14 Power connection jack

a) Power adapter can be plugged directly.

b) Optional battery box. Encounter power shortage, battery

box is optional.

Note：4 pieces of 5# (AA) battery

Fig7. 14 external battery box

7.15 Other

(1) Angle reticule and cross reticule

Eyepiece reticule is composed by angle reticlue and cross reticule (Fig7.15.1). Integer prism degree can be read directly from cross reticlue. Decimal degree can be estimated from cross reticule. The minimum of angle reticlue is 1° .

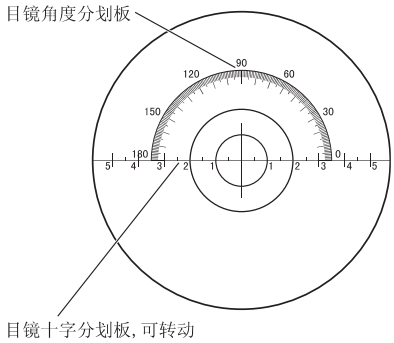

Fig7.15.1 Angle reticule and cross reticule

(2) Marker Reticule

The marker reticule is shown as Fig7.15.2. Long green lines are in the horizontal position.

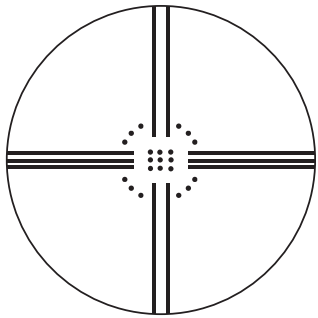

Fig7.15.2 Marker Reticule

8. Operation Instruction

8.1 Preparation before Measurement

(1) Place the instrument on the working table and adjust inclination of the instrument so that operator is able to work comfortably.

(2) Apply power.

(3) Regulate eyepiece's visibility.

Before measurement, visibility of eyepiece shall be regulated in order to get accurate and reliable results of measurements.

Method: While observing black cross dividing line of (angle reticule 7 and cross reticule 8) in the view field of eyepiece, rotate eyepiece cover in one way (one-way rotation can remove influence due to regulation effect of eyes) until the black cross line gets the clearest.

(4) Regulation of zero position of instrument.

Rotate diopter measuring handwheel to regulate scale interval to zero position and observe green dividing line of marker reticule 3 in the view field of eyepiece. At this time, the green dividing line is clearest.

8.2 Points for Attention in Operation

(1) A measurand person who has relatively deep diopter or astigmatism of eyes shall wear glasses to correct defects of vision. Only after that,can measurement be carried out.

(2) Among the green dividing lines,2 longer ones are spherical marking lines and 3 longer ones are cylindrical marking lines.

8.3 Placement of Lens

(1) Lens should be placed on the objective lens bearing seat with concave facing downwards. The upper edge of lens assembled on the lens frame should be leaned against the lens pushing board.

(2) Lightly release the lens pressing unit so that the pressing feet press the lens slightly.

(3) Regulation of lens center.

Observe it through eyepiece 9 and rotate diopter measuring handwheel to make green dividing line of marker reticule 3 clearest. At the same time, move the lens so that the green dividing line of marker reticule 3 coincides with center of black cross dividing line of (angle reticule 7 and cross reticule 8).

8.4 Measurement of Spherical Lens

Rotate diopter measuring handwheel so that green dividing line of marker reticule 3 becomes clearest. Then scale interval on the reading window is the spherical diopter of the said lens.

8.5 Measurement of Sphero-Cylindrical Lens

Sphero-Cylindrical Lens means astigmatic lens. Normally its outer surface is spherical and inner surface is cylindrical or drum-typed (I. internal astigmatism).Each section of the internal surface has different refractive power, in which 2 mutually vertical sections have weakest refractive power and strongest refractive power.

When this instrument is used to measure such kind of lens, 2 long green lines and 3 long green lines of marker reticule 3 will not get clear simultaneously.

Measurement is made in 4 steps:

Step 1: Rotate diopter measuring handwheel so that the torus (composed of 12 small green dots) is imaged into clear looped short cylindrical lines. Then rotate astigmatic axis measuring handwheel again, so that spherical marking line (2 long green ones) and torus short lines are in the same direction. At the same time, conduct fine tuning of the diopter measuring handwheel to make 2 long lines clearest. Now write down a reading value of diopter.

Step 2: Rotate diopter measuring handwheel again so that cylindrical marking lines (3 long green ones) are focused to be clearest and in the same direction of the torus short lines. Now write down again a reading value of diopter.

Step 3: Calculation of the degree of astigmatism. Subtracting reading values of the diopter of above-stated 2 times is just the astigmatism dergee of the said lens.

Step 4: Note down the reading value of the astigmatism axis angle axison the astigmatism axis measuring handwheel (which can be also read from angle reticule 7)

Note： Diopter of a sphero-cylindrial lens may be written in various forms, where, spherical diopter may be expressed as low luminosity or high luminosity, and cylindrial diopter (i.e astigmatic degree) expressed as a positive or negative number. This can be done simply by way of luminosity transformation.

In this operation instruction, spherical diopter is assumed to be of low luminosity. The procedures of measurement are shown as follows:

(1) Measurement of spherical refractive

Clearly focus on the sphere reticule.

Note: two clear images are obtained at this moment. Rotate diopter measuring handwheel and, at the same time, rotate astigmatism axis measuring handwheel to focus spherical marking lines most clearly and record the diopter. Then rotate astigmatism axis measuring handwheel 90° again focusing on spherical marking lines clearly, and record the diopter. Comparing the two readings, take the smaller absolute value (ie low light) as the spherical diopter

(2) After determining the spherical diopter, rotate diopter measuring handwheel again focusing on spherical marking lines clearly and record the refraction value at this time (high brightness)

(3) The difference between the two readings is the astigmatism of the lens, and the angle can be read directly from the astigmatism axis measuring handwheel

Example 1: Calculation of +1DS-3.5DC × 30°

Step 1: Rotate diopter measuring handwheel and, at the same time, rotate astigmatism axis measuring handwheel to focus spherical marking lines clearly. Now the measured data is: diopter $+1m^{-1}$, axis angle 30° .Then rotates the axial astigmatism handle 90º focusing spherical marking lines clearly once more. Now the measured data is: $-2.5m^{-1}$ diopter, 120° axial angle. Take $+1m^{-1}$ as spherical diopter.

Step 2: Rotate diopter measuring handwheel and, at the same time, rotate astigmatism axis measuring handwheel to focus cylindrical marking lines clearest at $+1m^{-1}$. This is the first reading. And then rotates diopter measuring hand wheel once again to focus cylindrical marking line clearly. Now it's $-2.5m^{-1}$ diopter, this is the second reading.

Step 3: $(-2.5m^{-1})$ - $(+1m^{-1})$= $-3.5m^{-1}$, i.e astigmatism degree is $-3.5m^{-1}$.

Step 4: Astigmatism axis angle is directly shown on the astigmatism axis measuring handwheel, which is 30° , as is shown in Fig.8.5.1 and Fig.8.5.2.

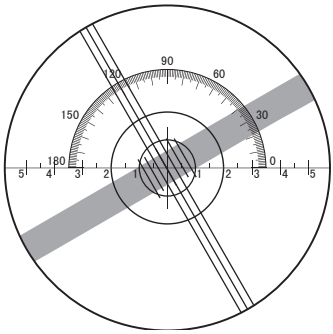

Fig.8.5.1 Image at $+1m^{-1}$

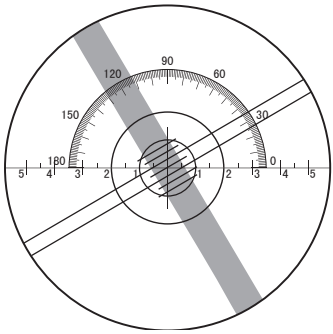

Fig.8.5.2 Image at $-2.5m^{-1}$

Illustration: +1DS-3.5DC × 30° can be converted into -2.5DS+3.5DC × 120° , and can be also measured using this instrument, which will not be described here again.

8.6 Calculation of Prism Lens

Place prism lens on the objective lens bearing seat and aim its optical center at center of the bearing seat(i.e optical axis). Rotate diopter measuring handwheel to focus lines of marker reticule 3 clearly, the marking lines can be seen to deviate from center of cross reticule 8.The deviating direction is the base direction of prism eyeglass. Rotate astigmatism axis measuring handwheel so that the middle one of 3 long green marking lines passes through the center of cross reticule 8, thus value of base angle of prism lens can be read off according to astigmatism axis measuring handwheel(which can be read according to angle reticule 7 also).Prism diopter can be estimated according to the reading on cross reticule 8,as shown in Fig.8.6

In the figure: Diopter of prism lens is estimated as 2cm/m and dividing line image of marker reticule 3 deviates by 30° to upper right side. Measured data of the said prism lens include

prism diopter 2cm/m and base angle 30° .

The prism compensation device is needed when measuring

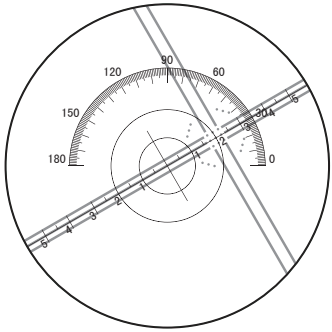

Fig.8.6 Calculation of Prism diopter

lens diopter is above 5cm/m.Rotate the diopter measuring handwheel and turn the angle to adjust the devision line on marker reticule 3 to the proper position. Then you get two prism diopter from cross reticule 8 and the prism compensation device. The sum of the two numbers is the prism diopter of the lens; the base angle can be read from the prism compensation device.

8.7 Demarcation of Lens

(1) Determination of the optical center of 2 assembled lens

Place the glasses on the instrument. First choose any one of glasses and rotate diopter measuring handwheel to make it in focus, at the same time, lightly move glasses frame so that the focused-image is at the center of optical axis and make a center printing mark on the lens by the use of printer. Then repeat the operation to print a mark on another lens. Now with a slide caliper, simply measure the distance between two printing marks on lens center.

(2) Demarcation of spherical lens

a、Rotate diopter measuring handwheel to focus lines of

marker reticule 3 most clearly.

b、Lightly move the lens to find the right optical center.

c、Make center marks by the use of printer.

(3) Demarcation of the axis of sphero-cylindrical lens

a、Rotate astigmatism axis measuring handwheel to a required angle

b、Rotate diopter measuring handwheel and, at the same time, turn lens to focus cylindrical marking lines clearly.

c、Lightly move the lens to find the right optical center.

d、Make 3-point marking marks by the use of printer.

(4) Demarcation of the base of prism lens

a、Rotate astigmatism axis measuring handwheel to a required angle.

b、Rotate diopter measuring handwheel and, at the same time, turn lens to focus cylindrical marking lines clearly.

c、Lightly trun prism lens so that the middle one of 3 long green marking lines passes through center of the cross reticule 7.

d、Make 3-point marking marks by the use of printer.

9. Maintenance of Instrument

(1) Factory-adjusted control of the instrument has been carried out; Please do not dismantle it at will so as not to influence its indicating precision.

(2) The instrument should be used in a dry and ventilated indoor place in order to prevent the optical components from damping or mildew.

(3) After using it, clean the instrument and cover lens with dust shield.

(4) revent the instrument from severe vibration or impact to avoid damage & looseness of parts and components and guarantee the measuring precision.

(5) Always keep the instrument clean. Touching surface of optical parts is strictly prohibited. Dust and stain on it shall be cleaned with absorbent cotton dipped with mixture solution of ethanol and ether.

10. Troubleshooting

No	Trouble	Reason	Solution
1	Bulb can't be lighted	Power connection is not good	reconnect
2	When eyepiece diopter adjusted to the maximum position, angle and cross reticule is still not clear	Degree of the measured person's myopic is too deep or he has astigmatism	Wear spectacles
3	Green marking image can not be seen	Bulb can not be lighted	Reconnect the power
		Dust shield is not taken off	Take off the shield
4	Green marking image can not be seen	Dust on optical lens	Clean it using cotton dipped with cleaning solution
5	Deviation of green marking image	Loosening of lock screw on measuring bearing	Regulate the screw and lock it